1/ MACHINE STAND
2/ DRIVE MOTO REDUCTOR
3/ DOSING MECHANISM
4/ WEIGHT SCALE
5/ HOPPER
6/ BAGS WELDER

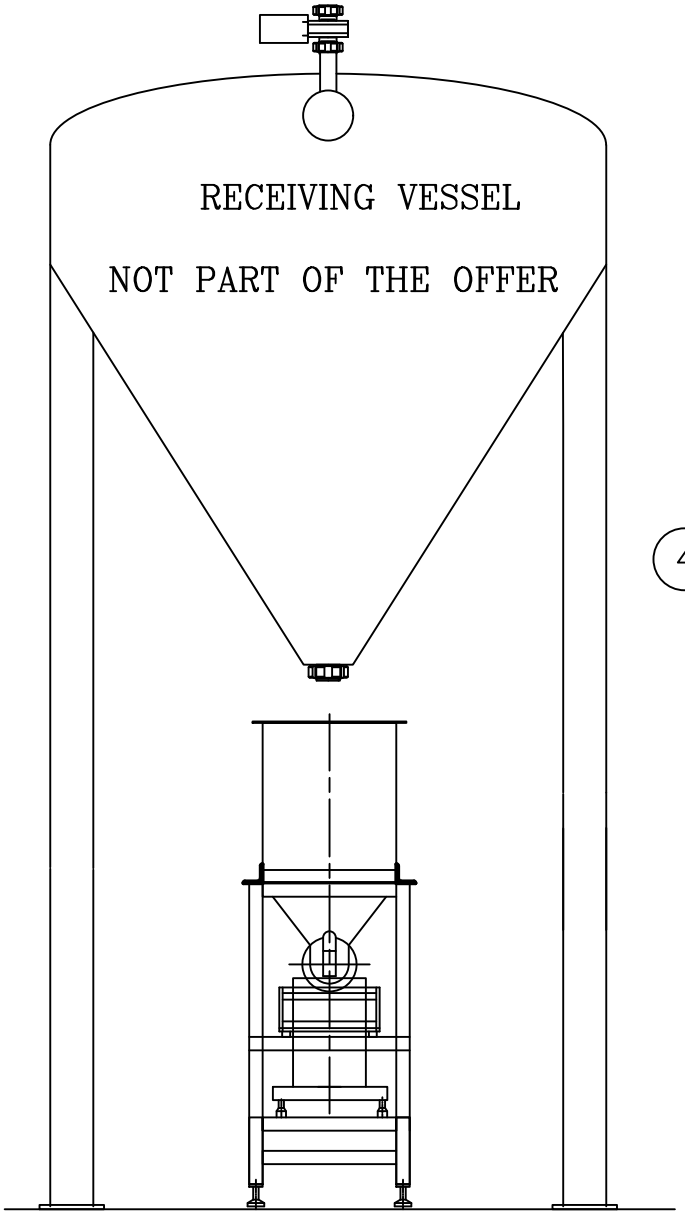

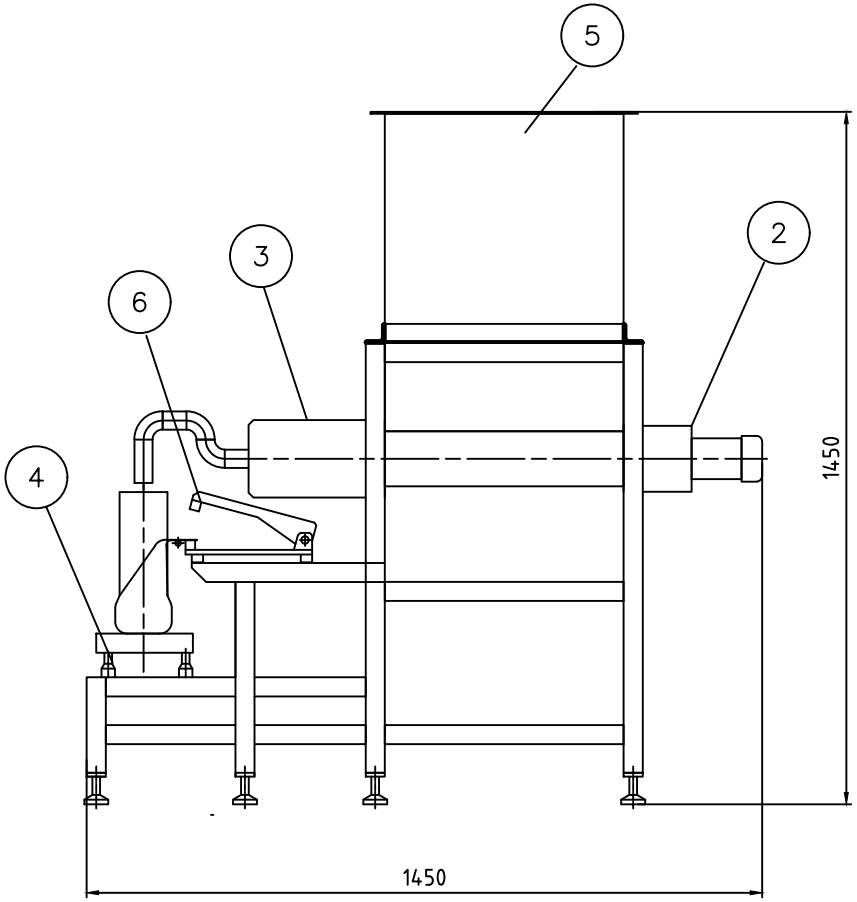

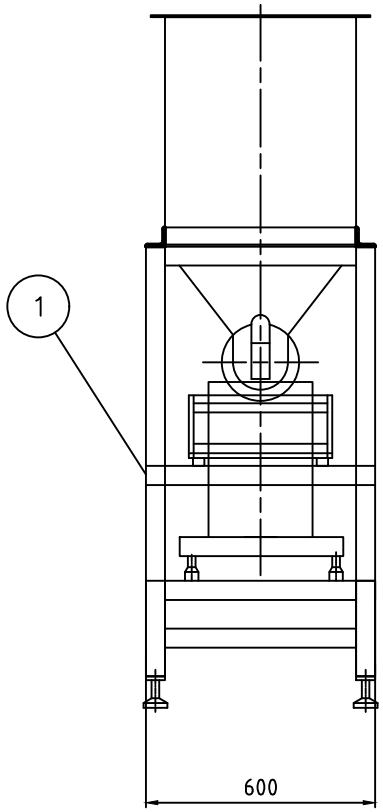

PD 10000 S

PAK PROMET KRAGUJEVAC	KLIJENT / CUSTOMER		UGOVOR – ORDER
	TITOLO / TITLE: PD 10000 S		REV.
DESCRIZIONE / DESCRIPTION: MACHINE ASSEMBLY			

	FIRMA FIRMA	DATA DATE	SCALA SCALE	CRTEZ BR. DRAWING N°	REV.
DISEGNAT. DRAFTSMAN					
CONTR. INSPECTOR				LIST BR. Sheet n° / LISTOVA Follow sheet n°	
ULT.REV. LAST REVIS.					